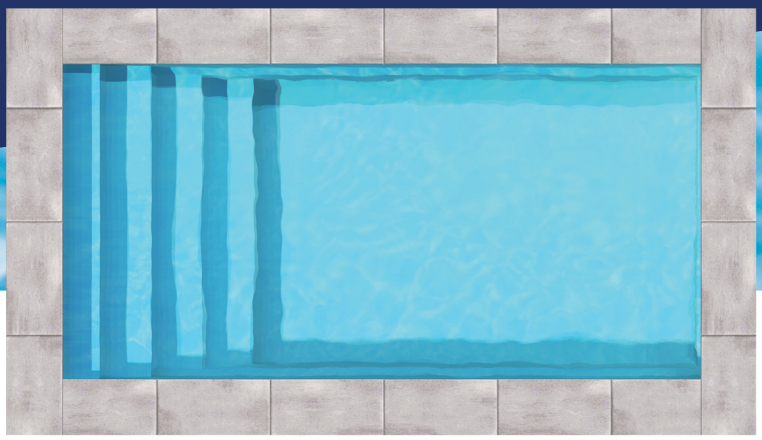

816

Top view

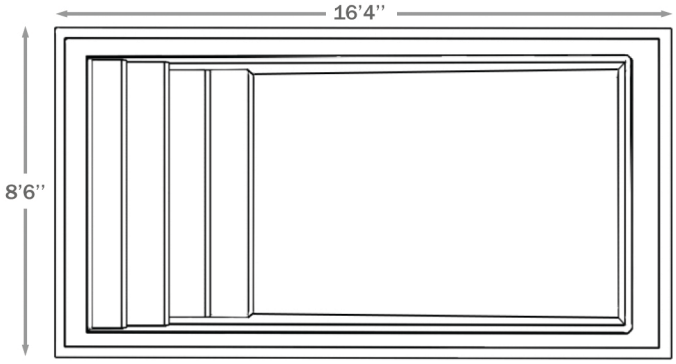

SPECIFICATIONS

WEIGHT empty pool
900 Pounds

VOLUME interior
460 Cubic feet

VOLUME water
11700 Liters

Profile view

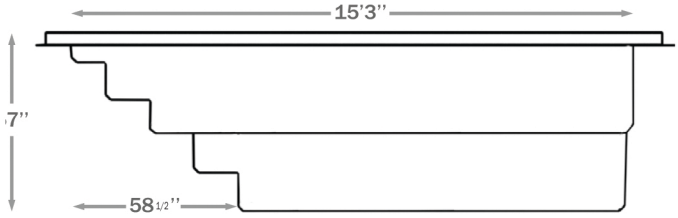

COLORS AVAILABLE

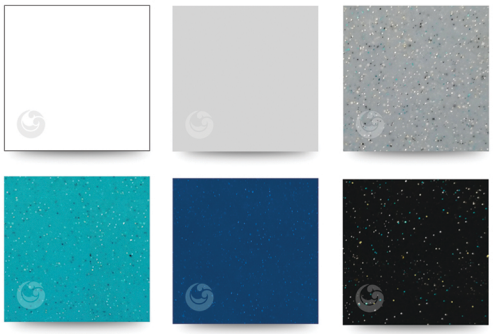

Cut view

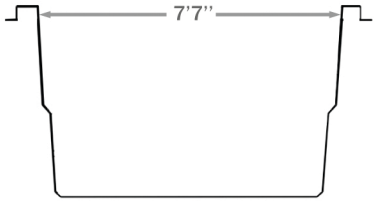

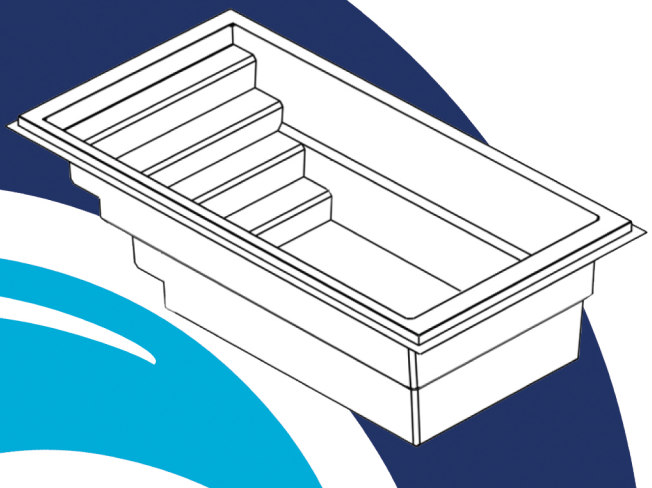

Manufactured in Canada

AQUA RINO

www.aquarino.ca